SUBMITTAL DATA: AIRCELL DZSP/SZSP-1440

Dual/Single Zone Hydronic Heating/AC Module

STANDARD FEATURES

- EC Fan Technology
- 110V Power Supply
- Heating/Cooling Hydronic Coil
- Heavy Duty Plastic Clamshell Design
- Integrated Drain Pan
- Motorized Zone Dampers
- Quick Connect 15mm to 1/2" Push Fit Connection
- Control Board with Wifi Wireless PC App
  - Fan Speed Control
  - Auto Timed Zone Control
  - Fresh Air Introduction Control
  - Temperature Set Points
  - Alarm Settings
    - water temp - dampers
    - wifi communication - status

RATING & CAPACITIES

RATED CAPACITY:

Cooling ☐ 1.2 Tons
(14,400 btu/h) (300 CFM)
EWT 42°F

Heating ☐ 24,000 btu/h (330 CFM)
EWT 160°F

ELECTRICAL:
120V/1ph/60 Hz

WATTS:
90W

FLOW RATE:
3.5-5 GPM

SOUND PRESSURE LEVEL:
22 dBA

WEIGHT:
36 LBS.

PIPING & DUCTING

FIELD PIPE SIZE:
15mm OD

DUCT:
2" Flexible
6" Flexible
7" Flexible

SUPPLY ADAPTER

☐ 4 – 2" Round Qty. _____

☐ 6" Round Qty. _____

☐ 7" Round Qty. _____

RETURN ADAPTER

☐ 6" Round Qty. _____

☐ 7" Round Qty. _____

ZONING

☐ Single

☐ Dual

PLASTIC SPECIFICATION

MATERIAL:
Cycoloy Resin C6600 UL94 Rated

DIMENSIONS

WIDTH:
23-1/2"

DEPTH:
35-1/2"

HEIGHT:
9-1/16"

SPACE PAK®

260 North Elm St., Westfield, MA 01085
(800) 465-8558 Fax: (413) 564-5815

7555 Tranmere Drive, Mississauga, ONT. L5S 1L4 Canada
(905) 672-2991 Fax: (905) 672-2883

www.spacepak.com

PROJECT: _____ **DATE:** _____
LOCATION: _____
CUSTOMER: _____
ENGINEER: _____
SUBMITTED BY: _____
FOR: ☐ **Reference** ☐ **Approval** ☐ **Construction**
UNIT DESIGNATION: _____
SCHEDULE NUMBER: _____

SUBMITTAL DATA: AIRCELL DZSP/SZSP-1440

DETAILS & DIMENSIONS

	Heating	Cooling
Entering Water Temperature	160°F	42°F
Btu/h	24,000	—
Tons	—	1.2
Watts	90W	
CFM	330	300
Flow Rate GPM	3.5-5	
Weight lbs.	36	

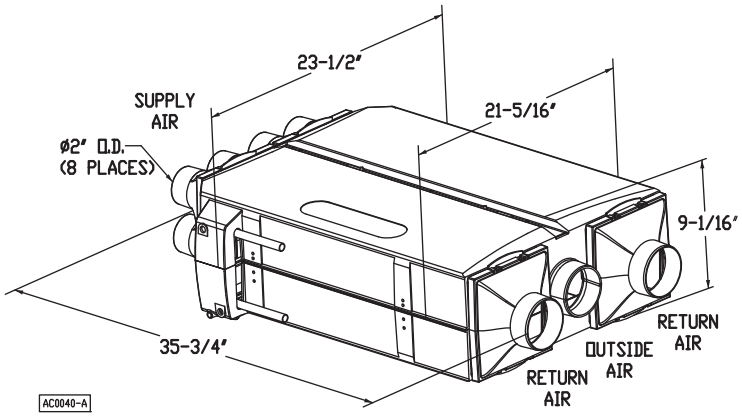

MOUNTING

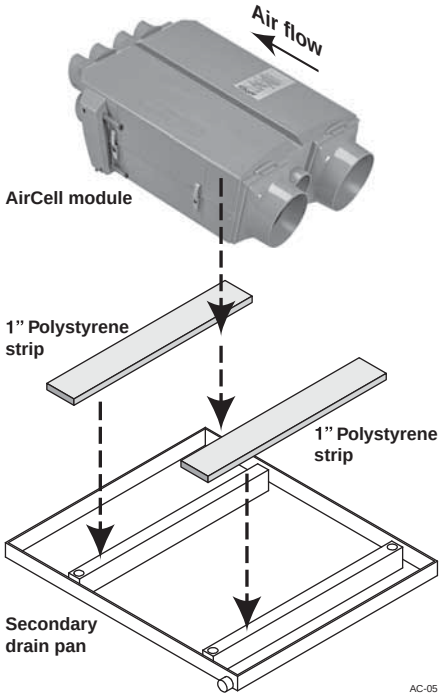
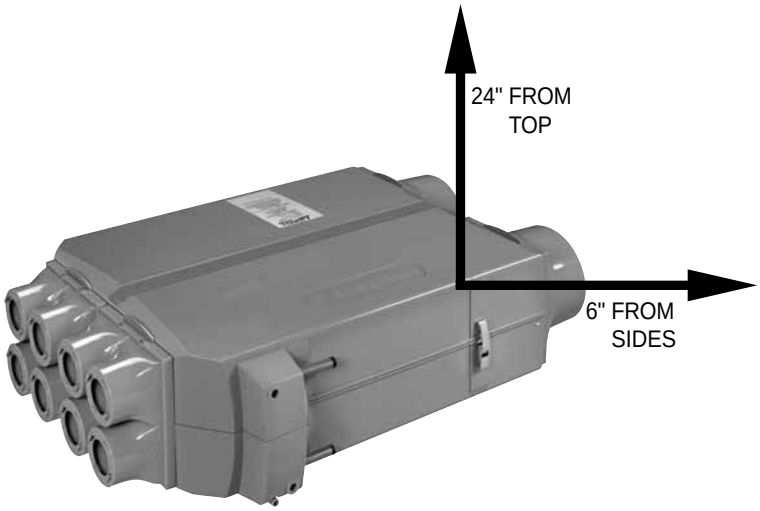
MINIMUM CLEARANCES – For Servicing