SPACE PAK®

MODEL LSO LINEAR SLOT OUTLET INSTALLATION INSTRUCTIONS

GENERAL
The SpacePak linear slot outlet is designed for installation in both new construction and retrofit applications. The fully integrated outlet requires no additional mounting hardware and is supplied with a trim plate that boasts a slim profile less than 1/8 inch.

SECTION 1: DIMENSIONAL INFORMATION 2

SECTION 2: INSTALLATION
New Construction Installation ..... 2 & 3
Existing Construction Installation ..... 2 & 3

WARRANTY 4

SPACE PAK®

260 NORTH ELM STREET • WESTFIELD, MA 01085 • 800-465-8558 • FAX (413) 564-5815
7555 TRANMERE DRIVE • MISSISSAUGA, ONTARIO L5S 1L4 CANADA • (905) 672-2991 • FAX (905) 672-2883

A MESTEK COMPANY

Section 1: LSO DIMENSIONAL INFORMATION

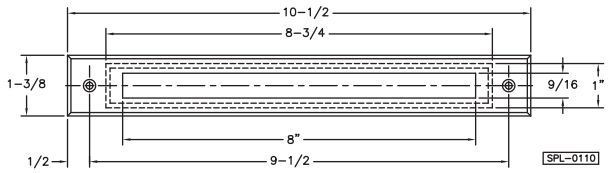

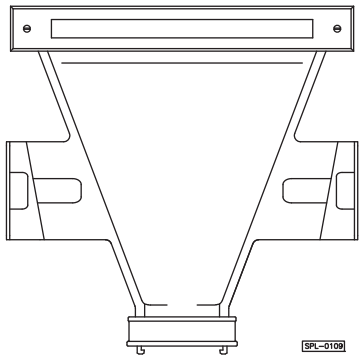

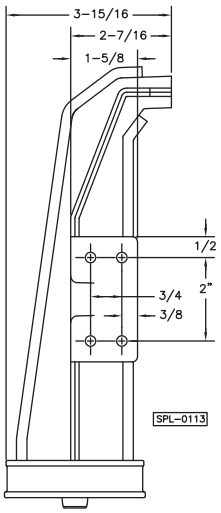

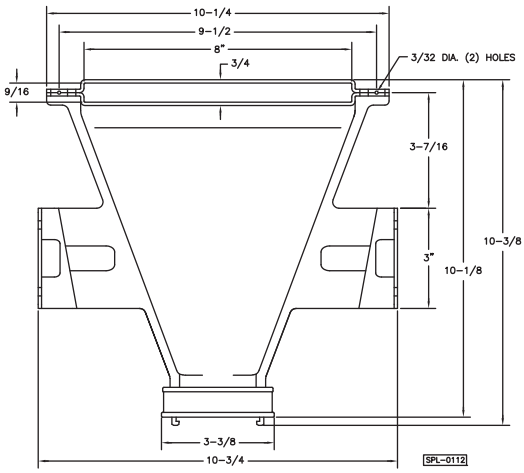

Section 2: INSTALLATION

LSO Installation in New Construction
see Figure 1

1. Secure attenuator tube to LSO kwik connect.
2. Position LSO against stud so that front edge of Trim Plate Mounting Tab is flush with front edge of stud (see Figure 2).
3. Secure LSO to stud using wood screws.
4. Loosely attach Trim Plate to LSO body.
5. Install first sheetrock panel to meet edge of LSO Trim Plate.
6. Place LSO template on second sheetrock panel so that edge nearest stud is positioned where stud ends (see Figure 3).
7. Cut notch and install panel.
8. Tighten Trim Plate screws. Do not to over tighten.

LSO Installation in Existing Construction
see Figure 4

1. Loosely attach Trim Plate to LSO body.
2. Secure attenuator tube to LSO kwik connect.
3. Cut out a 9" high section of sheetrock from centerline to centerline of studs.
4. Position LSO against stud so that front surface of Trim Plate Mounting Tab is flush with front surface of stud (see Figure 2) and edge of LSO Trim Plate rests against sheetrock.
5. Secure LSO to stud using wood screws.
6. Place LSO template on sheet-rock panel cut in step 3 aligning with edge of stud (see Figure 3).
7. Cut notch and install panel.
8. Tighten Trim Plate screws. Do not to over tighten.

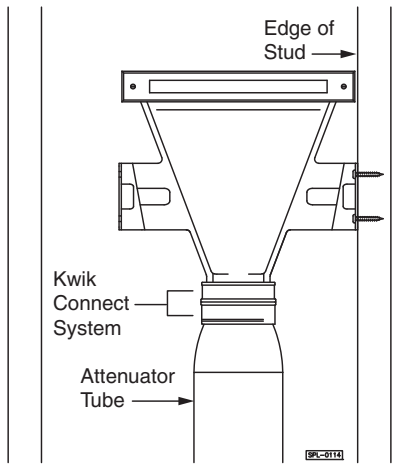

FIGURE 1: STUD POSITIONING NEW CONSTRUCTION

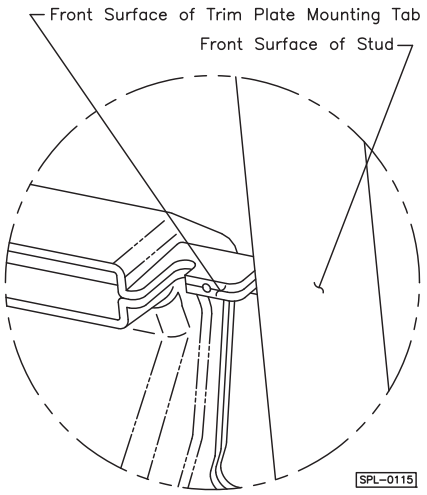

FIGURE 2: MOUNTING LSO TO STUD

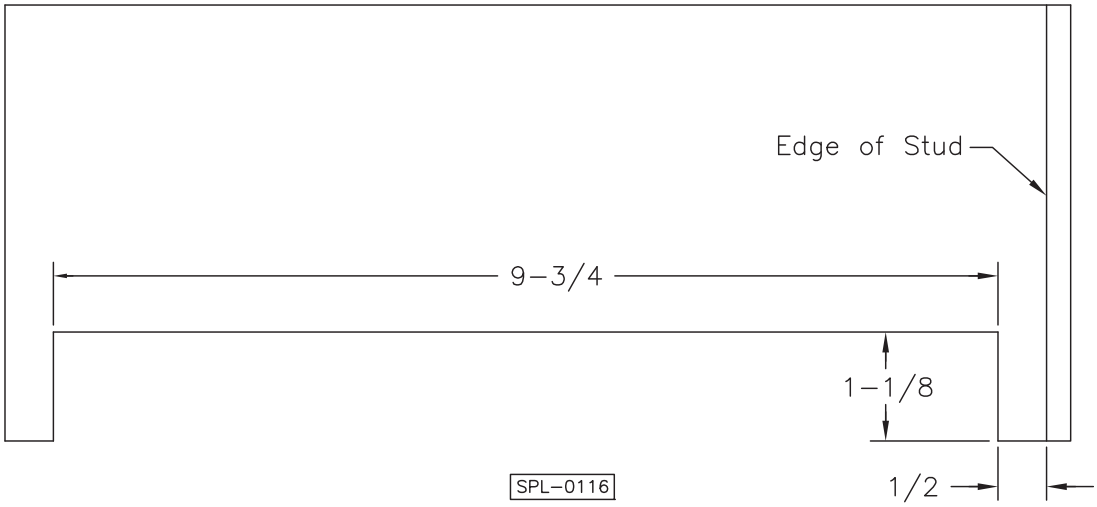

FIGURE 3: LSO TEMPLATE

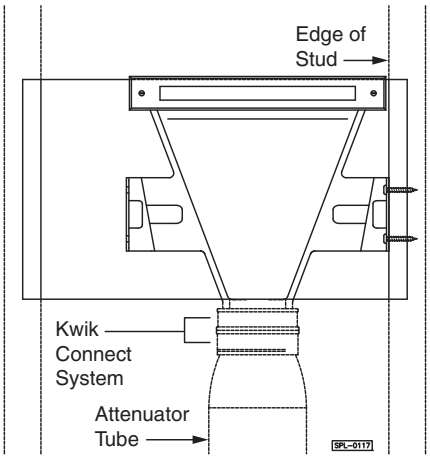

FIGURE 4: STUD POSITIONING EXISTING CONSTRUCTION

LIMITED WARRANTY
Central Air Conditioning Products

The “Manufacturer” warrants to the original owner at the original installation site that the Central Air Conditioning Products (the “Product”) will be free from defects in material or workmanship for a period not to exceed one (1) year from the startup or eighteen (18) months from date of shipment from the factory, whichever occurs first. If upon examination by the Manufacturer the Product is shown to have a defect in material or workmanship during the warranty period, the Manufacturer will repair or replace, at its option, that part of the Product which is shown to be defective.

This limited warranty does not apply:

a) if the Product has been subjected to misuse or neglect, has been accidentally or intentionally damaged, has not been installed, maintained or operated in accordance with the furnished written instructions, or has been altered or modified in any way.
b) to any expenses, including labor or material, incurred during removal or reinstallation of the defective Product or parts thereof.
c) to any workmanship of the installer of the Product.

This limited warranty is conditional upon:

a) shipment, to the Manufacturer, of that part of the Product thought to be defective. Goods can only be returned with prior written approval from the Manufacturer. All returns must be freight prepaid.
b) determination, in the reasonable opinion of the Manufacturer, that there exists a defect in material or workmanship.

Repair or replacement of any part under this Limited Warranty shall not extend the duration of the warranty with respect to such repaired or replaced part beyond the stated warranty period.

THIS LIMITED WARRANTY IS IN LIEU OF ALL OTHER WARRANTIES, EITHER EXPRESS OR IMPLIED, AND ALL SUCH OTHER WARRANTIES, INCLUDING WITHOUT LIMITATION IMPLIED WARRANTIES OF MERCHANTABILITY OR FITNESS FOR A PARTICULAR PURPOSE, ARE HEREBY DISCLAIMED AND EXCLUDED FROM THIS LIMITED WARRANTY. IN NO EVENT SHALL THE MANUFACTURER BE LIABLE IN ANY WAY FOR ANY CONSEQUENTIAL, SPECIAL, OR INCIDENTAL DAMAGES OF ANY NATURE WHATSOEVER, OR FOR ANY AMOUNTS IN EXCESS OF THE SELLING PRICE OF THE PRODUCT OR ANY PARTS THEREOF FOUND TO BE DEFECTIVE. THIS LIMITED WARRANTY GIVES THE ORIGINAL OWNER OF THE PRODUCT SPECIFIC LEGAL RIGHTS. YOU MAY ALSO HAVE OTHER RIGHTS WHICH MAY VARY BY EACH JURISDICTION.

SPACE PAK® CENTRAL AIR ANYWHERE

A MESTEK COMPANY