SPACE PAK CENTRAL AIR ANYWHERE®

MODEL ESP-V CENTRAL AIR CONDITIONING/ HEAT PUMP SYSTEMS

2 TO 5 TONS

SpacePak makes it possible to install central cooling and heating in any home or business, regardless of structure design, age, size or type of construction. SpacePak is an air distribution system which uses a principle known as aspiration - as the air stream enters the room, it creates a gentle mixing of air in the room to provide thorough, comfortable draft-free air circulation. SpacePak eliminates stratification with a minimum floor-to-ceiling temperature difference.

IDEAL APPLICATION FLEXIBILITY

Can be located nearly anywhere -- closets, basements, crawl-spaces and garages.

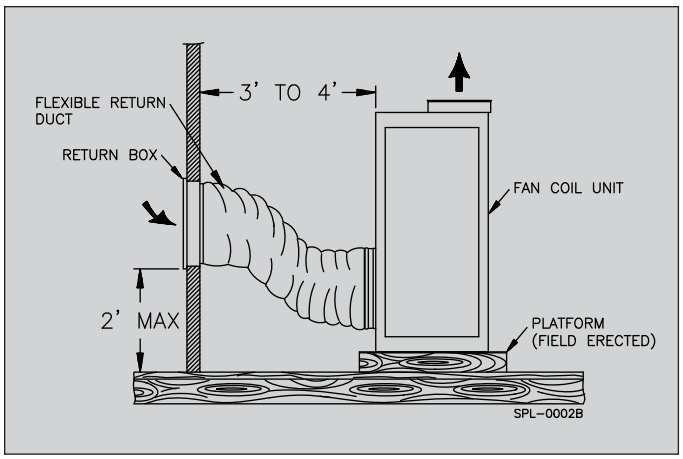

STANDARD FAN COIL FEATURES

- Corrosion resistant cabinet with baked enamel finish. Fully insulated with 1-1/2" lb. density batt.
- Six-row copper tube-aluminum fin evaporator coil removes up to 30% more humidity than conventional coil.
- Blower motor is factory-balanced for vibration-free operation.
- Condensate drain connection in base pan for specially-designed, factory-supplied condensate drain assembly.
- Factory-assembled, pre-wired control center with high and low voltage terminal blocks, blower relay and low voltage transformer.
- Factory-installed anti-frost control and thermal expansion valve. Standard factory-installed primary drain pan float switch. Sweat type suction/liquid line connections.
- All Connections located on same side of unit.
- Can be installed with a conventional outdoor condensing unit as long as capacity and refrigerant line connections meet SpacePak recommendations.
- Shipped with Nitrogen holding charge.

Model	Nominal System Capacity Nom. Tons	Nominal System Capacity Cool MBH*	Std. CFM@ 1.5" W.C.	Motor HP	F.L. Amps	Connections Suction Line	Connections Liquid Line	Ship Wt. (lbs)	Recommended Condensing Unit Capacity (MBH)
ESP-2430-V	2	23	550	1/3	1.8	7/8"	3/8"	135	24
	2-1/2	27							30
ESP-3642-V	3	35	850	1/2	2.8	7/8"	3/8"	170	36
	3-1/2	40							42
ESP-4860-V	4	48	1150	1	3.6	7/8"	3/8"	210	48
	5	57							60

NOTES:

Electrical Characteristics: 208-230/1/60.

* For cooling capacity and SEER rating when mated with a specific condensing unit, check the ARI directory at www.ari.org

SPACE PAK ESP-V SYSTEM

AIR DISTRIBUTION SYSTEM

Pre-fabricated, pre-assembled components, as shown below, can simply be snapped and taped or locked together. With SpacePak, duct sizing is not required. Except for the return air ducts and boxes (only three separate sizes required), all systems use the same size components which helps reduce inventory stock requirements.

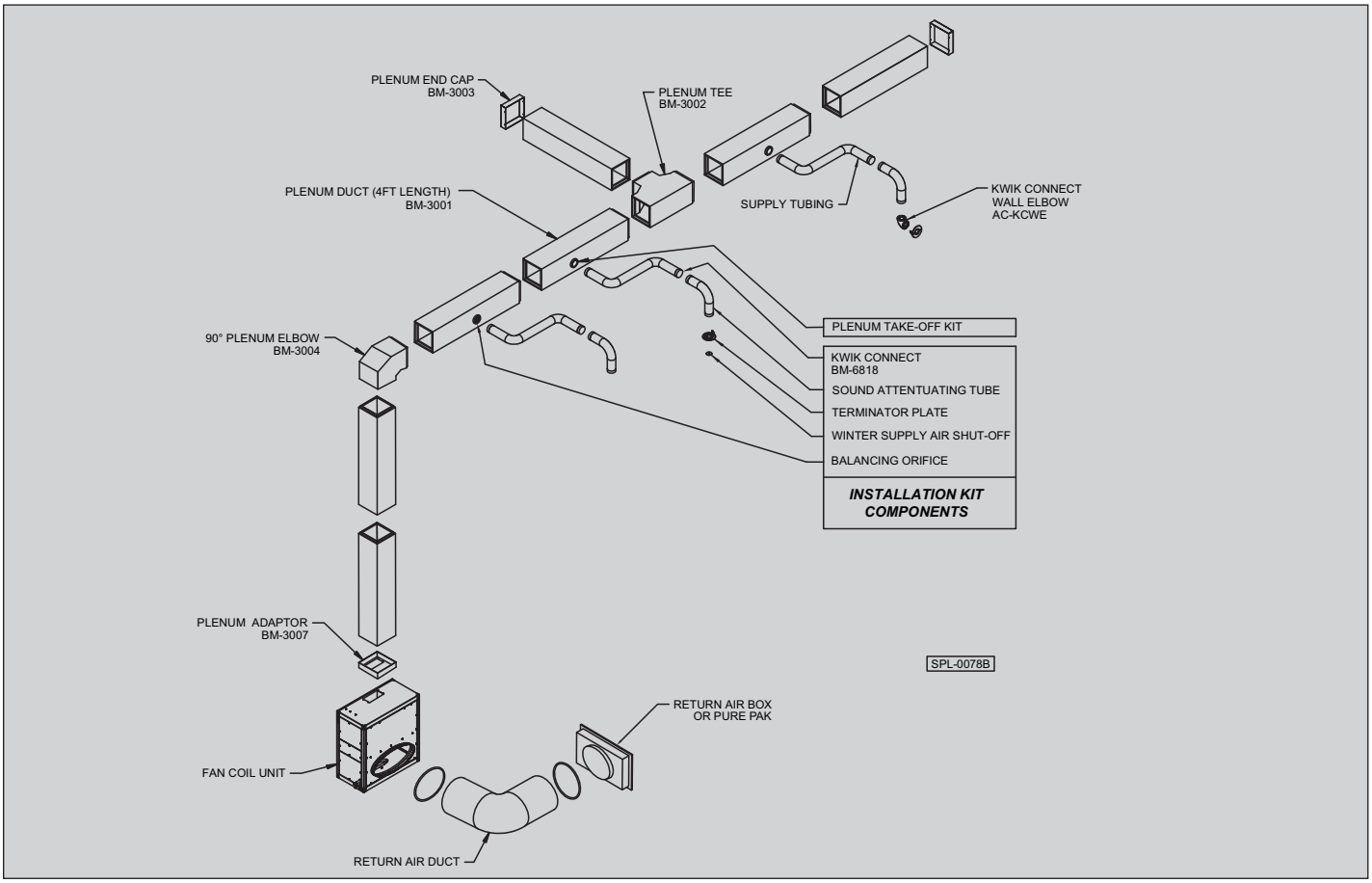

Fan Coil Unit Dimensions

MODEL	A	B	C
ESP-2430V	16-1/8"	24"	34"
ESP-3642V	16-1/8"	33"	34"
ESP-4860V	16-1/8"	43"	34"

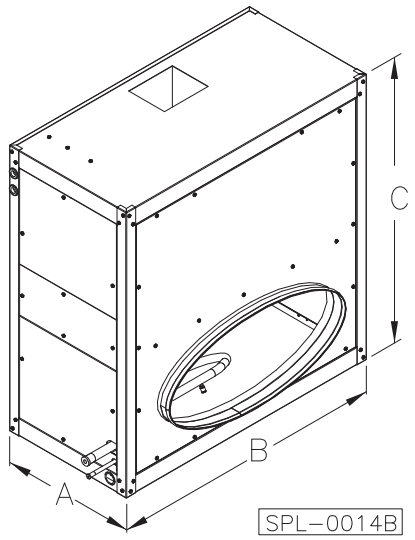

260 NORTH ELM ST.
WESTFIELD, MA 01085
(413) 564-5530/FAX (413) 564-5815

SPACE PAK

7555 TRANMERE DRIVE
MISSISSAUGA, ONT. L5S 1L4 CANADA
(905) 672-2991/FAX (905) 672-2883