SPACE PAK®

A MESTEK COMPANY

ELECTRIC DUCT HEATER MODULE
RECOMMENDED INSTALLATION GUIDELINES:

All wiring must be installed in accordance with the latest releases of the National Electric Code, and any additional state / local codes. Verify this duct heater is correctly matched to the specific SPACEPAK model. The following chart specifies which heaters may be installed with which SPACEPAK model:

TABLE 1 – HEATER COMPATIBILITY AND CIRCUT SIZE

Heater Model Number	KW / MCA		Compatible Model:
	@208V	@240V	
BM-6927 – WESP 0721R/0962R	7.2KW / 43.2A	9.6KW / 50A	ESP-2430, 3642, 4860D/V*
BM-6928 – WESP 1081R/1442R	10.8KW / 64.9A	14.4KW / 75A	ESP-2430, 3642D/V
BM-6929 – WESP 1441R/1922R	14.4KW / 86.5A	19.2KW / 100A	ESP-4860D (V not allowed)

*4860V (vertical) requires two 10KW (BM-6927) heaters, where two main plenum ducts are required. Heaters are installed downstream of "H" duct.
*4860D (horizontal) requires a "Y" or Tee connection 24" downstream of the heater outlet. See Installation Manual for recommended duct configurations.

WARNING: YOU MUST NOT USE THE 15 kW HEATER WITH THE ESP2430D. YOU MUST NOT USE THE 20 kW HEATER WITH EITHER THE ESP2430D, ESP3642D or the ESP4860V. THESE COMBINATIONS DO NOT HAVE SUFFICIENT AIRFLOW FOR SAFE OPERATION OF THE ELECTRIC HEATERS.

WARNING: The electric duct heater must be installed in the SPACEPAK plenum duct at least 48" downstream of the SPACEPAK unit. There must not be any supply tubes in the plenum duct between the SPACEPAK and the duct heater. There must not be any plenum elbows or plenum tees between the SPACEPAK and the duct heater.

WARNING: The electric heating unit MUST be installed such that air flows HORIZONTALLY, also heeding unit markings "This Side Up".

1. Prior to installation, inspect the SPACEPAK heater per the manufacturer's UL instructions included within the heater's control cabinet. Make careful note of any damage prior to installation and notify your local supplier ASAP for replacement if necessary.
2. Install heater in the discharge plenum, no closer than 48" from the unit discharge, and 24" minimum distance from fittings downstream. The plenum duct sections will fit right over the metal inlet and outlet collars on the duct heater (May require additional square-to-round or other adapter (e.g. BM-3010)). Make certain that the direction of airflow through the heater matches the direction marked on the heater. Provide adequate external support for the duct heater – DO NOT rely solely on the fiberglass duct for support; use strapping or cradling as needed. Heater is UL-listed for zero clearance to combustible materials, and may therefore be set directly onto any type of wood support
3. Seal the ends of the plenum duct to the duct heater with UL181A-P-approved foil tape. Insulate the exposed metal ends of the heater after joints are sealed, with 1" (min) fiberglass insulation.

WARNING:
DISCONNECT ALL ELECTRICAL POWER PRIOR TO WIRING TO PREVENT SERIOUS INJURY OR DEATH

4. Connect line voltage to terminals L1 and L2, Be sure to use appropriate breaker or fuse ampacity as suggested in Table 1, or as listed in Figures 3, 4 & 5, or on the inside cover of the heater. For example, 10KW, at 208V, MCA 43.2, should use a 45A maximum breaker with appropriate wire gage per NEC and local codes. Do NOT energize until all wiring is complete per the rest of these instructions – Go back and re-check all connections.

260 NORTH ELM STREET
WESTFIELD, MA 01085
(413) 568-9571 • FAX (413) 568-9613

SPACE PAK® A MESTEK COMPANY

5211 CREEKBANK ROAD
MISSISSAUGA, ONTARIO L4W 1R3 CANADA
(905)625- 2991 • FAX (905) 625-6610

5. Connect the 24V control wiring between the SPACEPAK unit and the electric heater per Figure 1 (non-heat pump) or Figure 2 (heat pump system). Contact customer service for alternate configurations.

6. For typical heat pump thermostats, SPACEPAK recommends the jumper configuration in Table 2 and Figure 2. Create jumper wires using 18GA copper-stranded, insulated wire suitable for high temperature applications.

7. To enable auxiliary electric heat during DEFROST (heat pump systems), cnnect "W" on the SPACEPAK unit, to "L" on the heater, which will energize all heater stages during defrost initiated by the outdoor unit.

8. **To reduce short-cycling or excessive discharge-temperature conditions in mild weather, use one or more of the following… (If airflow has been reduced below rated flow due to duct configuration. The heater should not be allowed to cycle on temperature safeties, due to improper installation. If this is occurring, first check for rated airflow, and call SPACEPAK technical services for help in resolving the problem. (An additional relay to * disable the outdoor (heat pump) unit is recommended per its respective manufacturer's instructions.)

   a. Install an outdoor thermostat (e.g. Honeywell T678B or T475A) in place of jumpers J1, J2 or J3 (for 2430, 3642 or 4860, respectively) as designated Table 2, and in Figures 1 and 2 for the appropriate model heater. This may also become necessary if airflow has been reduced below rated flow due to duct configuration. The heater should not be allowed to cycle on temperature safeties, due to improper installation. If this is occurring, first check for rated airflow, and call SPACEPAK technical services for help in resolving the problem. An additional relay to disable the outdoor (heat pump) unit is recommended per its respective manufacturer's instructions.

   b. Install a safety limit switch (duct stat) in series with jumpers "J1" and/or "J2". Honeywell model L4008A1015, or White Rodgers model 11826 are recommended for this purpose. These models have been selected for their adjustable, and wide-range differential, to help eliminate short cycling. Place the sensing bulb into the top of the duct (so that bulb remains near top of duct, where temperature will be highest) immediately downstream of heater outlet. Set the maximum temperature to 120F (open-on-rise), with a high differential.

   c. Install a thermostat with additional stages (ie. Includes W3 output), wiring W3 output in place of J1 (2430), J2 (3642) or J3 (4860). Examples of suitable models are: Honeywell T874W1015, Y594, T8611M2025; Robertshaw MC9720 or 300227; White Rodgers 1F94371

TABLE 2 - JUMPER / ANTI-SHORT-CYCLE USAGE

Heater Size	Jumpers (see Figures 1 and 2)
10KW	J1
15KW	J1 and J2
20KW	J1, J2 and J3

Helpful Notes:

- For heat/cool thermostats, it is necessary to use a thermostat designed to energize the fan circuit "G" in heating mode.
- Optionally, SPACEPAK recommends the installation of an Air Flow Switch - "AFS" per Figures 1 and 2.
- Table 1 indicates rated capacities at 208 and 240V. To approximate KW at other voltages, use the following equation: KW = KW (rated at 240V) x $(\text{actualV}/240)^2$

WARNING! Do not make any modifications to the heater without written instructions from a SPACEPAK representative! SPACEPAK shall not be liable for usage beyond the intent of these instructions. Please contact factory for alternate configurations.

TABLE 3 - DIMENSIONS (inches) FOR FIGURE 6:

	10KW	15KW	20KW
A	15	15	15
B	11	11	11
C	18	21	21
D	4	4	4
E	9	9	9

FIGURE 6 - HEATER ILLUSTRATION

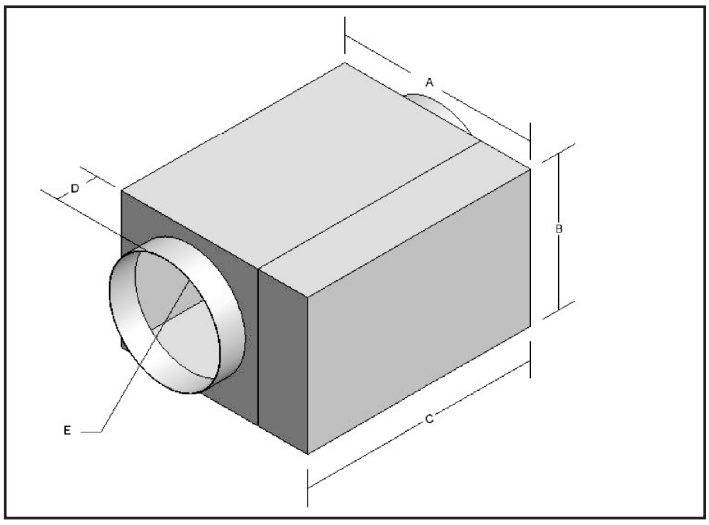

FIG. 1- COOLING - ONLY W/ ELECTRIC HEAT

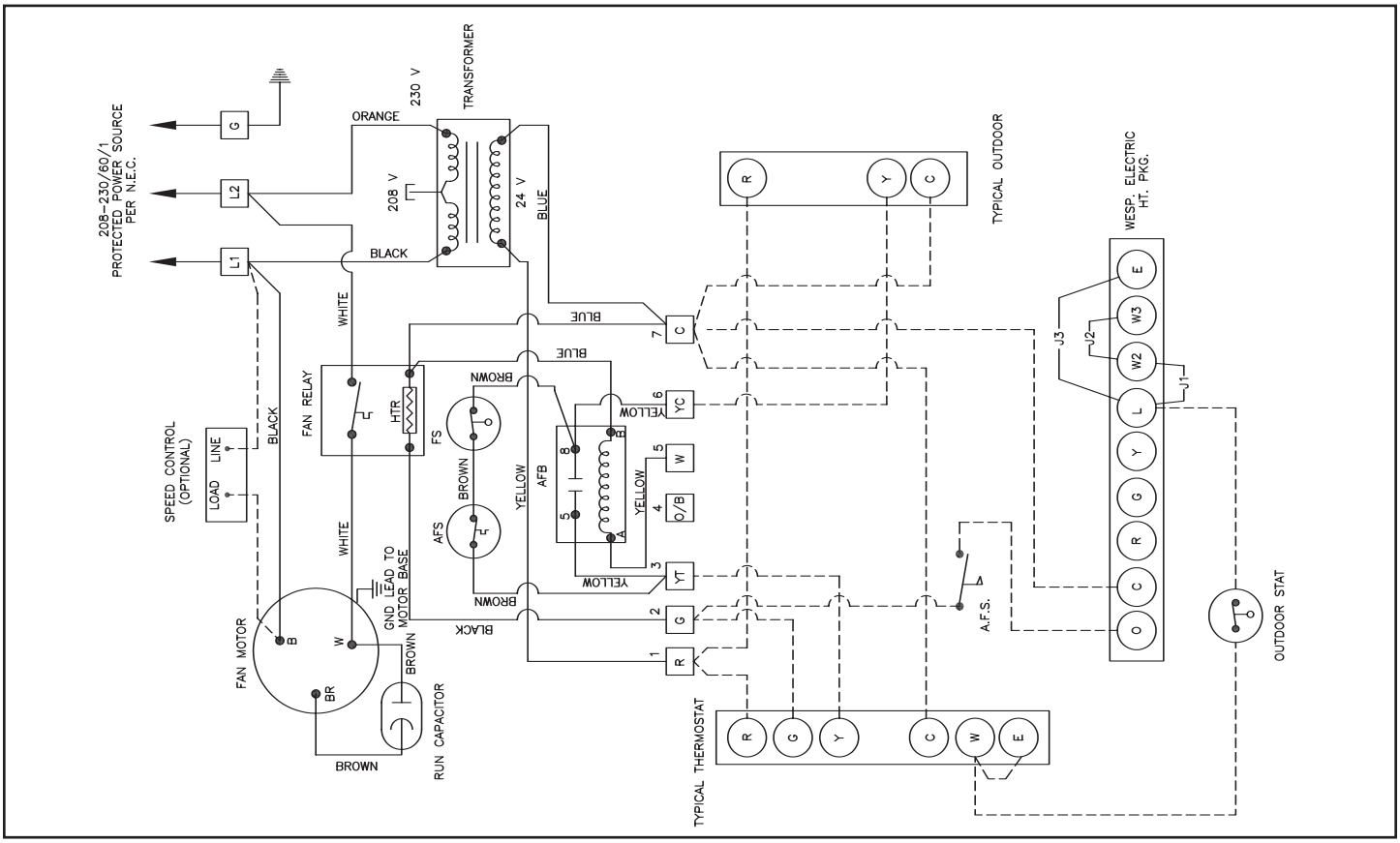

FIG. 2- COOLING / HEAT PUMP - W/ ELECTRIC HEAT

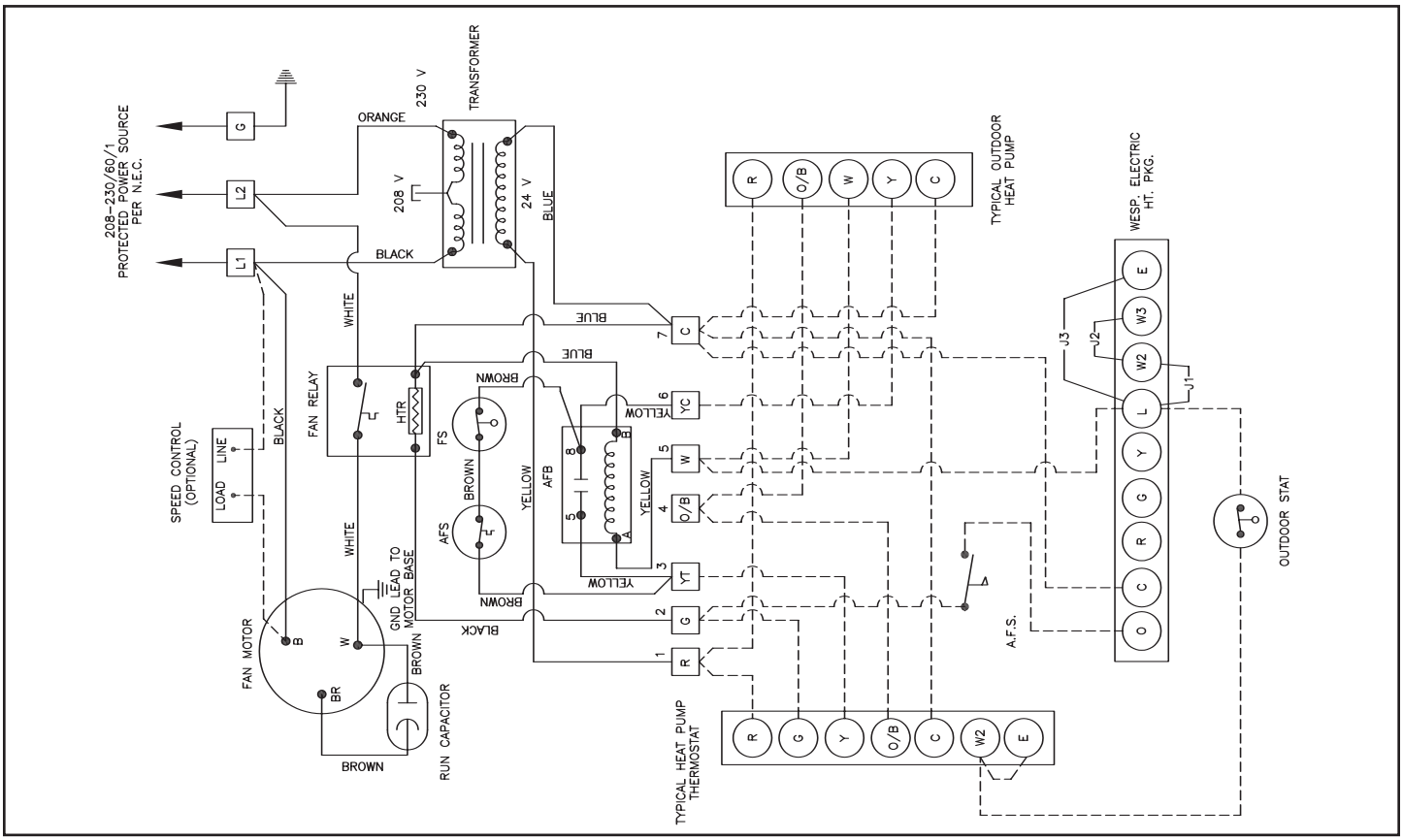

FIG. 3- 10 KW ELECTRIC DUCT HEATER WIRING DIAGRAM

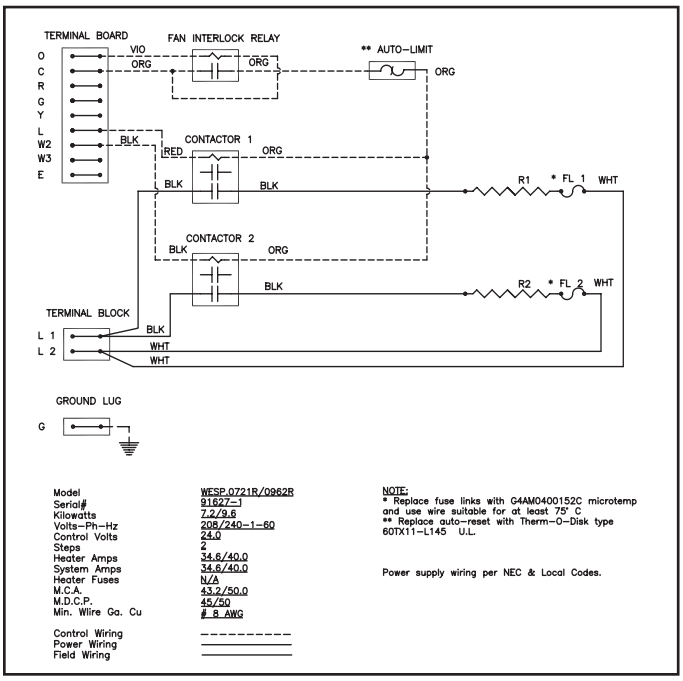

FIG. 4- 15KW ELECTRIC DUCT HEATER WIRING DIAGRAM

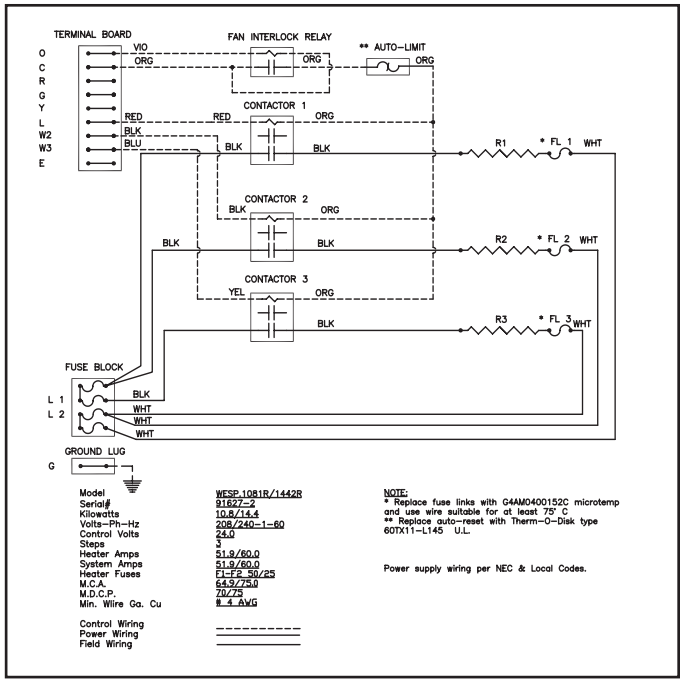

FIG. 5- 20KW ELECTRIC DUCT HEATER WIRING DIAGRAM

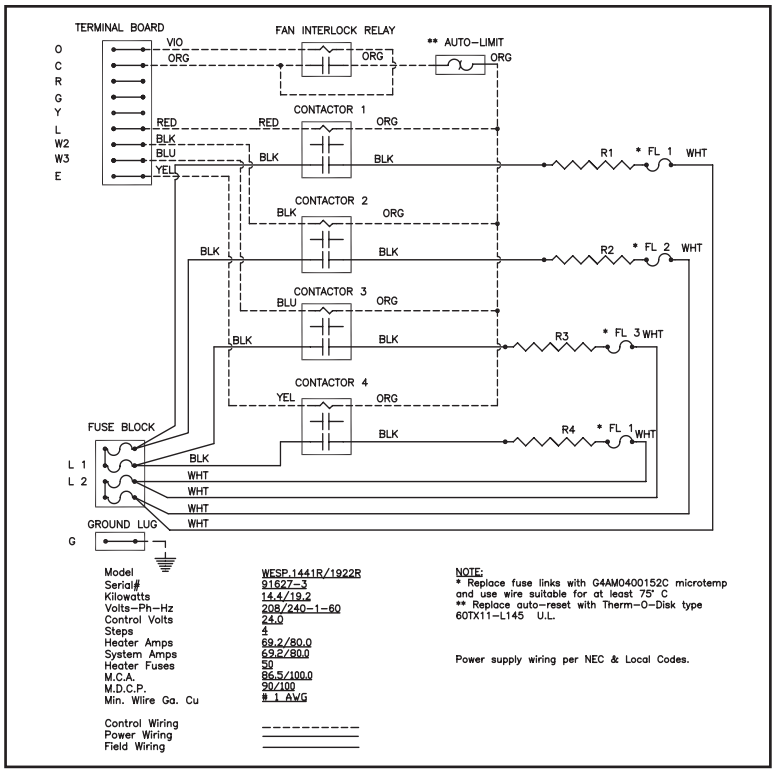

260 NORTH ELM STREET
WESTFIELD, MA 01085
(413) 568-9571 • FAX (413) 568-9613

SPACE PAK®
A MESTEK COMPANY

5211 CREEKBANK ROAD
MISSISSAUGA, ONTARIO L4W 1R3 CANADA
(905)625- 2991 • FAX (905) 625-6610