SPACE PAK® CENTRAL AIR ANYWHERE

MODEL AC-RMK-G REMOTE MOUNT PANEL KIT INSTALLATION INSTRUCTIONS

GENERAL

The Remote Panel Kit (Model AC-RMK-G) allows SpacePak ESP-G Series fan coil unit controls to be mounted outside the unit. The electrical Panel (B) of the kit is to be exchanged with the electrical Panel (A) inside fan coil unit's internal control box.

NOTICE: Refer to fan coil unit installation instructions for all other installation information.

NOTICE: The wire harness included with this kit is 10-feet long. It is strongly recommended to measure the distance between the fan coil unit's electrical connection points and the final location of the remote box electrical connection points prior to mounting the remote box permanently.

Using field supplied hardware, installation can be easily done by following the steps on the back of this page.

All wiring must be installed in accordance with the latest release of the National Electric Code, and any additional state/local codes.

The following terms are used throughout this manual to bring attention to the presence of potential hazards or important information concerning the product:

⚠ WARNING Indicates an imminently hazardous situation which, if not avoided, could result in death, serious injury or substantial property damage.

NOTICE: Used to notify of special instructions on installation, operation or maintenance which are important to equipment but not related to personal injury hazards.

⚠ WARNING Improper installation, alteration, service or maintenance can cause property damage, injury or death. Read the installation instructions thoroughly before installing or servicing this equipment.

INSTALLATION

⚠ WARNING Disconnect power source to the fan coil unit before installing the remote mount kit. Failure to do so could result in fatal electric shock or severe personal injury.

1. Disconnect all electric power to fan coil unit before beginning installation.

SPACE PAK® CENTRAL AIR ANYWHERE

MADE IN THE USA

260 NORTH ELM STREET • WESTFIELD, MA 01085 • (413) 564-5530 • FAX (413) 564-5815
7555 TRANMERE DRIVE • MISSISSAUGA, ONTARIO L5S 1L4 CANADA • (905) 672-2991 • FAX (905) 672-2883

A MESTEK COMPANY

2. Remove Panel (B) from the remote mounting box by removing the retaining nuts located at top/center and bottom/center of panel, set aside.
3. Wire harness is 10-feet long; select a suitable location for remote mounting box within 10 feet of the fan coil unit electrical connections and remote box electrical connections.
4. Using field supplied hardware, secure remote mounting box to a suitable structure through the recessed, slotted holes.
5. Remove the fan coil unit's electrical control box cover and disconnect the following wires:
   a. Two (2) BROWN wires from "AFS" and two (2) BLACK wires from "FS" on control panel
   b. BLACK motor wire from "FAN PWR" on control panel
   c. RED motor wire from "L2"
   d. Line power from "L1", "N", and "L2"
   e. Equipment Ground
6. Remove Panel (A) from the fan coil unit by removing the retaining nuts located at the top/center and bottom/center of panel. Set aside.
7. Install Panel (B) into fan coil unit control enclosure using previously removed retaining nuts and reattach wires as follows:
   a. Two (2) BROWN wires to terminals "AFS"
   b. Two (2) BLACK wires to terminals "FS"
   c. BLACK wire from motor to terminal "L1"
   d. RED wire from motor to terminal "L2"
   e. GREEN wire to "Equipment Ground"
8. Install Panel (A) into remote mounting box using previously removed retaining nuts.
9. Attach wire harness to fan coil unit and remote mounting box with supplied BX cable and connectors.

NOTICE: Harness end with all fork terminations connects to Panel B.
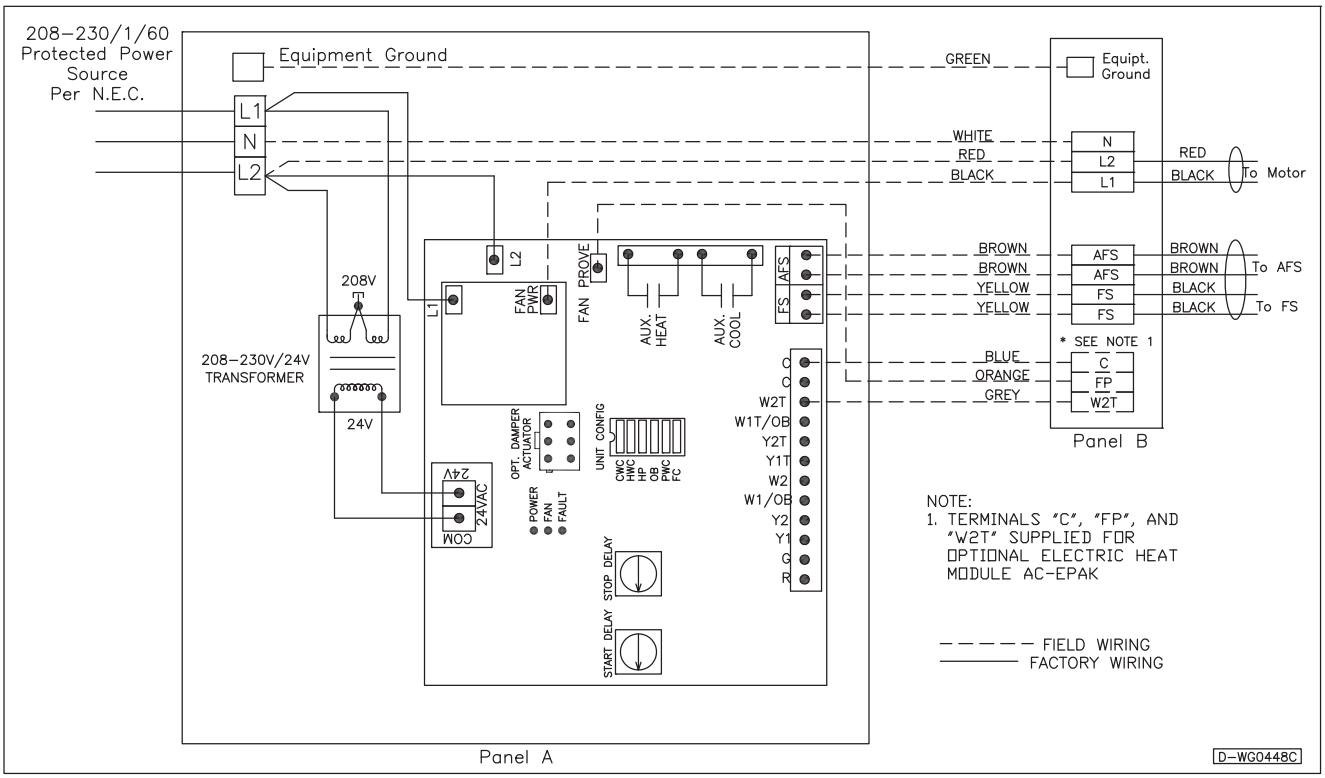
10. Wire Harness has eleven (11) terminated wires colored: BLACK, WHITE, GREEN, RED, BLUE, ORANGE, GREY, two YELLOW and two BROWN. Refer to diagram below for connection points.
11. Reconnect line power to "L1", "N", and "L2", and "Equipment Ground" on Panel (A).