ELECTRI PAK
Integral Electric Heat Module For "G" Series Fan Coil Units

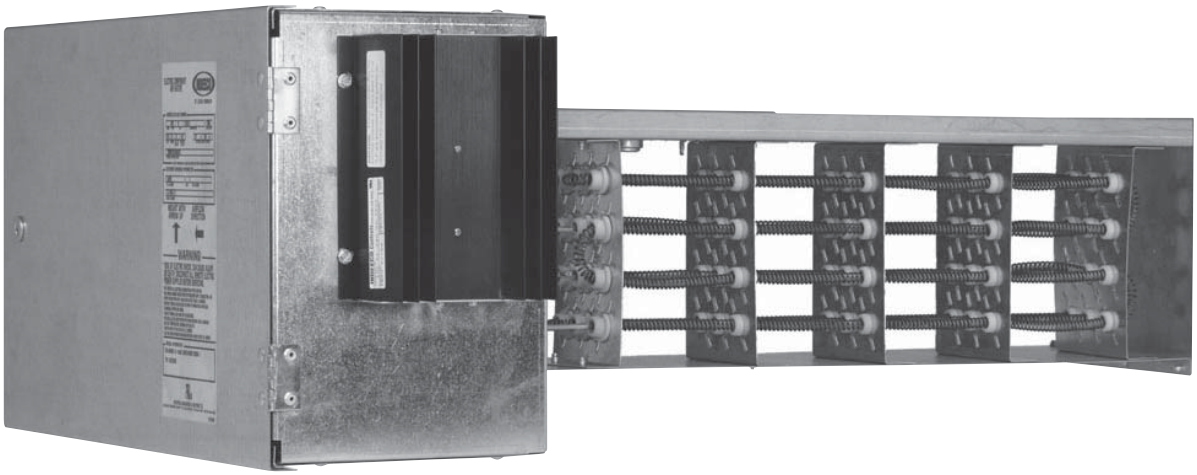

Integral Electric Heat Modules have been specifically designed to provide a heating option for SpacePak air distribution systems. They are easy to install in both new and existing installations and fit directly inside SpacePak horizontal fan coil units.However, should the fan coil unit be field-converted to vertical supply air discharge, the heat module will not fit due to the resulting blower housing obstruction and should not be used. Equipped with an internal modulating feature, heat discharge temperatures are sensed and can be controlled regardless of the load condition. The heater design eliminates the need for external regulating devices such as a multi-stage (W3) and / or outdoor thermostat.

HIGH QUALITY MATERIALS AND COMPONENTS

- Grade A Nichrome resistance wire (80% nickel, 20% chromium)
- Coils are machine crimped into stainless steel terminals
- High-temperature ceramic terminal and coil support insulators
- Heater frame constructed of heavy gauge corrosion-resistant steel

STANDARD ELECTRIC HEAT MODULE FEATURES

- Installs directly into fan coil unit - does not require any ductwork configuring or assembly
- Modulating heat
- Duct sensor located in the air stream monitors discharge temperature
- Solid State power controllers
- ETL Listed for zero clearance to combustibles
- Includes both automatic and manual reset thermal cutouts
- Can be used in conjunction with heat pumps
- Preset modulating output to maintain maximum discharge air temperature regardless of load conditions
- 24V control wiring
- Fail safe circuitry - all controls de-energize the heater which prevents runaway overheating conditions

INTEGRAL ELECTRIC HEAT MODULE

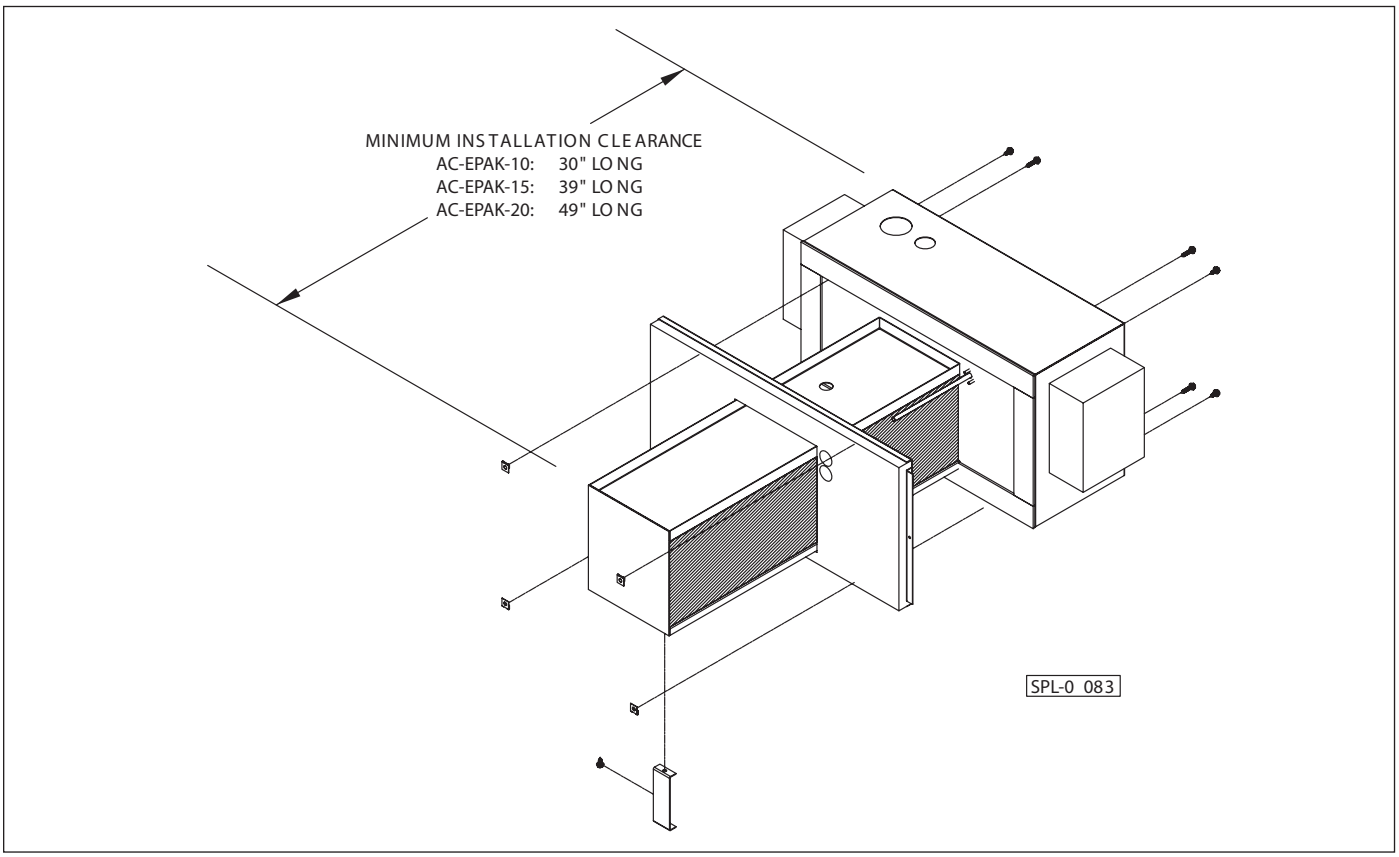

HEATER COMPATIBILITY / CIRCUIT SIZE

Electric Heat Module Model Number	Heat Output @ 240V	208/1/60		230/1/60		Fan Coil Unit Model Number
		FLA	MCA	FLA	MCA	
AC-EPAK-10G	10kW	48	60	43	54	ESP-2430G
AC-EPAK-15G	15kW	72	90	65	82	ESP-3642G
AC-EPAK-20G	20kW	96	120	87	109	ESP-4860G

To calculate kW at other voltages: kW = kW (rated at 240V) X (actual V/240)^2

MINIMUM AIRFLOW REQUIREMENTS (cfm)

Electric Heat Module Model Number	Nominal Airflow	Minimum Airflow	Fan Coil Unit Model Number
AC-EPAK-10G	550	440	ESP-2430G
AC-EPAK-15G	850	680	ESP-3642G
AC-EPAK-20G	1150	920	ESP-4860G

260 NORTH ELM ST.
WESTFIELD, MA 01085
(413) 564-5530/FAX (413) 564-5815

A MESTEK COMPANY

7555 TRANMERE DRIVE
MISSISSAUGA, ONT. L5S 1L4 CANADA
(905) 672-2991 FAX (905) 672-2883