MODEL EPAK ELECTRIC HEAT MODULE INSTALLATION INSTRUCTIONS FOR "G" SERIES FAN COIL UNITS

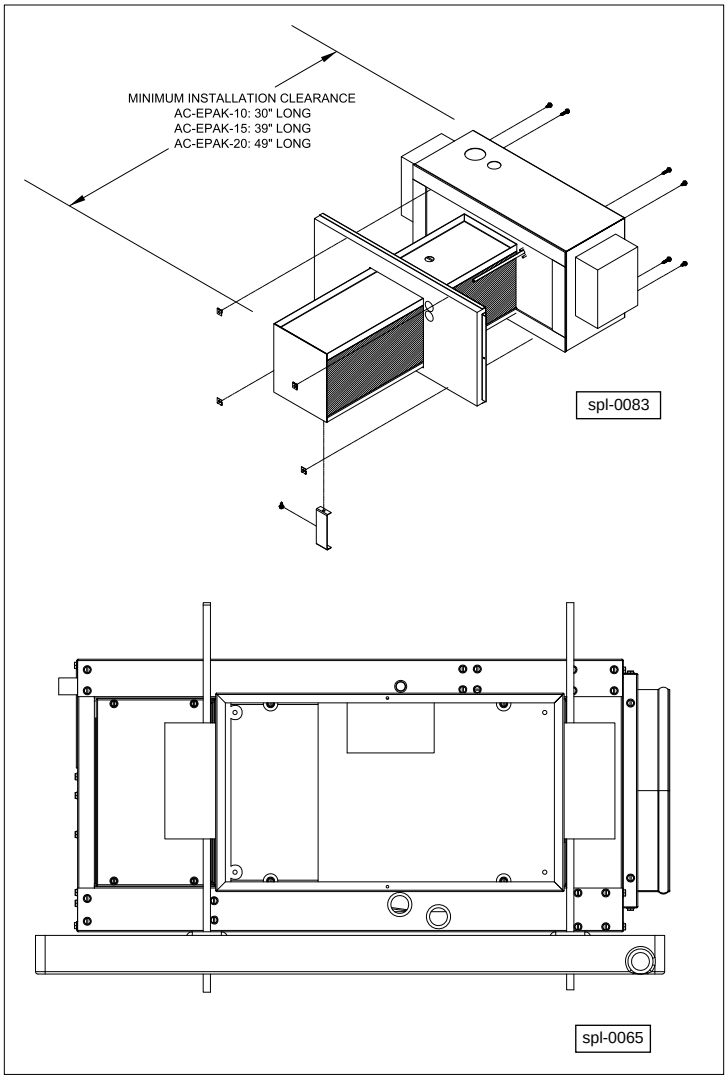

NOTE: 10 kW module has only (1) heatsink and is located on the right-hand side.

NOTICE: Additional working spaces and clearances may be required per Section 110.26 of the 2002 Edition of the National Electric Code. Verify all applicable clearance requirements and local codes prior to installation.

260 NORTH ELM STREET
WESTFIELD, MA 01085
(413) 564-5530 • FAX (413) 564-5815

7555 TRANMERE DRIVE
MISSISSAUGA, ONTARIO L5S 1L4 CANADA
(905) 670-5888 • FAX (905) 670-5782

03/2014

A MESTEK COMPANY

INTRODUCTION

The following terms are used throughout this manual to bring attention to the presence of potential hazards or important information concerning the product:

⚠ DANGER Indicates an imminently hazardous situation which, if not avoided, will result in death, serious injury or substantial property damage.

⚠ WARNING **Indicates an imminently hazardous situation which, if not avoided, could result in death, serious injury or substantial property damage.**

⚠ CAUTION Indicates an imminently hazardous situation which, if not avoided, may result in minor injury or property damage.

NOTICE: Used to notify of special instructions on installation, operation or maintenance which are important to equipment but not related to personal injury hazards.

ELECTRICAL REQUIREMENTS

NOTICE: Electric Heat Modules cannot be installed into fan coil units that have been field converted to a vertical supply air discharge.

All wiring must be installed in accordance with the latest release of the National Electric Code, and any additional state/local codes. Verify that the electric heat module is correctly sized to the specified fan coil unit model number (see **Table 1**).

⚠ WARNING **These Electric Heat Modules can only be used in DX horizontal units. Do not attempt to install in any other product other than those listed in Table 1.**

⚠ WARNING **Do not install the module if it has not been sized correctly.**

Table 1— Heater Compatibility and Circuit Size

Electric Heat Module Model Number	Heat Output @ 240 V	208/1/60		230/1/60		Fan Coil Unit Model Number
		FLA	MCA	FLA	MCA	
AC-EPAK-10G	10kW	48	60	43	54	ESP-2430G
AC-EPAK-15G	15kW	72	90	65	82	ESP-3642G
AC-EPAK-20G	20kW	96	120	87	109	ESP-4860G

AIRFLOW REQUIREMENTS

⚠ WARNING **For proper heat distribution, minimum airflows must be maintained as shown in Table 2.**

Table 2 — Minimum Airflow Requirements (cfm)

Electric Heat Module Model Number	Nominal Airflow	**Minimum Airflow**	Fan Coil Unit Model Number
AC-EPAK-10G	550	**440**	ESP-2430G
AC-EPAK-15G	850	**680**	ESP-3642G
AC-EPAK-20G	1150	**920**	ESP-4860G

INSTALLATION

⚠WARNING Improper installation, alteration, service or maintenance can cause property damage, injury or death. Read the installation instructions thoroughly before installing or servicing this equipment.

⚠WARNING Do not alter the Electric Heat Module in any way or damage to the unit and/or severe personal injury or death may occur!

1. Prior to installation, inspect the electric heat module for damage.

DO NOT INSTALL A DAMAGED HEATER INTO THE FAN COIL UNIT!

⚠WARNING Disconnect power source to the fan coil unit before installing or servicing the heater. Failure to do so could result in fatal electric shock or severe personal injury.

2. Remove both electrical control box cover and access panel from the fan coil unit by removing the nine screws (drain-side).

3. Attach the new access panel to the heat module using screws provided.

4. Attach the heater support bracket to the end of coil housing (as illustrated on cover).

5. Insert heat module assembly into fan coil unit, leaving the module half way out to allow for ease of wiring.

6. Field wire the interlock wiring (C, W2 & FP) from the heat module to fan coil unit control panel per **Figure 1**. Heater wiring should pass through the small ‘knockout’ on top of heater cabinet and feed through low voltage access at end of fan coil unit cabinet.

7. Connect duct sensor wires to T1 and T2 on heater panel as shown in **Figure 1**.

NOTICE: This unit senses the discharge air temperature and regulates it to a maximum temperature regardless of the load conditions.

8. Fully insert the heat module assembly into the fan coil unit carefully, tipping the bracketed end up so as not to damage the insulation on bottom of unit. Secure panel to unit with replacement tinnerman clips and screws provided.

9. Connect line voltage to terminals L1 and L2. Ensure the respective breaker or fuse ampacity matches those listed **Table 1**, or as shown on wiring diagram located inside heat module.

10. Check ALL wire connections for tightness.

11. Replace electrical control box cover.

ADDITIONAL NOTES:

A. For heat/cool thermostats, it is necessary to use a thermostat designed to energize the fan circuit "G".

B. To calculate kW at other voltages, use the following equation:
$kW = kW \text{ (rated at 240V) } X \text{ (actual } V/240)^2$

C. Fan coil unit installed with or without electric heat module is ETL listed for zero clearance to combustibles, however, N.E.C. requires service clearance to electrical components.

MAINTENANCE:

1. Check all electrical connections, including field and factory made connections, for tightness at least once each year or operating season.

2. Clean filters to maintain adequate airflow.

Figure 1

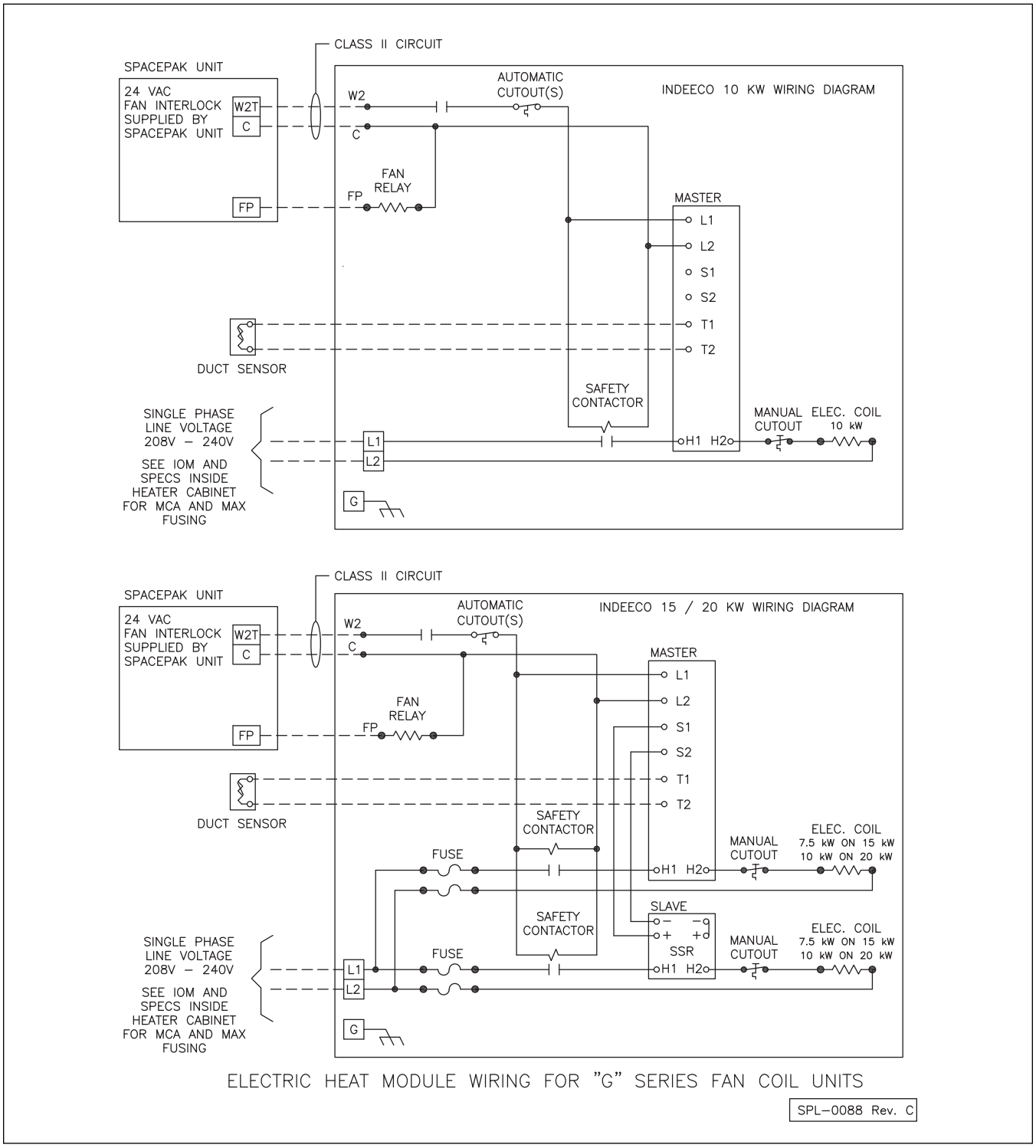

NOTES:

1) ALL FIELD WIRING TO BE IN ACCORDANCE WITH NATIONAL ELECTRIC CODE (NEC) AND LOCAL BUILDING CODES.
2) USE COPPER CONDUCTORS ONLY.
3) FOR ELECTRIC HEAT - E MAY BE JUMPED TO W2 AT THERMOSTAT.
4) PROPER PRECAUTIONS SHOULD BE TAKEN TO MAINTAIN ADEQUATE AIR VOLUME.

260 NORTH ELM STREET
WESTFIELD, MA 01085
(413) 564-5530 • FAX (413) 564-5815

SPACE PAK
A MESTEK COMPANY

7555 TRANMERE DRIVE
MISSISSAUGA, ONTARIO L5S 1L4 CANADA
(905) 670-5888 • FAX (905) 670-5782