REMOTE MOUNT PANEL KIT MODEL NUMBER: AC-RMK INSTALLATION INSTRUCTIONS

GENERAL

The remote panel kit (Model Number AC-RMK) allows SpacePak ESP-F Series fan coil unit controls to be mounted outside the unit. The electrical Panel (B) of the kit is to be exchanged with the electrical Panel (A) inside fan coil unit's internal control box.

NOTICE: The wire harness included with this kit is 10-foot long. It is strongly recommended to measure the distance between the fan coil unit's electrical connection points and the final location of the remote box electrical connection points prior to mounting the remote box permanently.

Using field supplied hardware, installation can be easily done by following the steps on the back of this page.

All wiring must be installed in accordance with the latest release of the National Electric Code, and any additional state/local codes.

The following terms are used throughout this manual to bring attention to the presence of potential hazards or important information concerning the product:

⚠ DANGER Indicates an imminently hazardous situation which, if not avoided, will result in death, serious injury or substantial property damage.

⚠ WARNING Indicates an imminently hazardous situation which, if not avoided, could result in death, serious injury or substantial property damage.

⚠ CAUTION Indicates an imminently hazardous situation which, if not avoided, may result in minor injury or property damage.

NOTICE: Used to notify of special instructions on installation, operation or maintenance which are important to equipment but not related to personal injury hazards.

⚠ WARNING **Improper installation, alteration, service or maintenance can cause property damage, injury or death. Read the installation instructions thoroughly before installing or servicing this equipment.**

260 NORTH ELM STREET
WESTFIELD, MA 01085
(413) 564-5530 • FAX (413) 564-5815

7555 TRANMERE DRIVE
MISSISSAUGA, ONTARIO L5S 1L4 CANADA
(905) 672-2991 • FAX (905) 672-2883

INSTALLATION

1. Disconnect all electric power to fan coil unit before beginning installation.

⚠ WARNING **Disconnect power source to the fan coil unit before installing remote mount kit. Failure to do so could result in fatal electric shock or severe personal injury.**

2. Remove Panel (B) from remote mounting box by removing retaining nuts located at top/center and bottom/center of panel. Set aside.
3. Wire harness is 10-foot long: select suitable location for remote mounting box within 10 feet of fan coil unit electrical connections and remote box electrical connections.
4. Using field supplied hardware, secure remote mounting box to a suitable structure through recessed, slotted holes.
5. Remove the fan coil unit's electrical control box cover and disconnect the following wires:
   a. BROWN wires from YT and YC on low volt terminal block
   b. BLACK FAN MOTOR wire from L1 on high volt terminal block
   c. RED or WHITE with red indicator, FAN MOTOR wire from terminal 4 on fan relay
   d. Line power from L1, N and L2
   e. Equipment Ground
6. Remove Panel (A) from fan coil unit by removing retaining nuts located at top/center and bottom/center of panel. Set aside.
7. Install Panel (B) into fan coil unit control enclosure using previously removed retaining nuts and reattach wires as follows:
   a. BROWN wires to terminals YT and YC
   b. BLACK wire to terminal L1
   c. RED or WHITE with red indicator wire from fan motor to terminal FR
   d. GREEN ground wire to Equipment Ground
8. Install Panel (A) into remote mounting box using previously removed retaining nuts.
9. Attach wire harness to fan coil unit and remote mounting box with supplied BX cable connectors.

NOTICE: Harness end with all fork terminations connects to Panel B.

10. Wire harness has six, terminated, wires colored: BLACK, WHITE, GREEN, RED and (2) BROWN. Refer to diagram below for connection points.
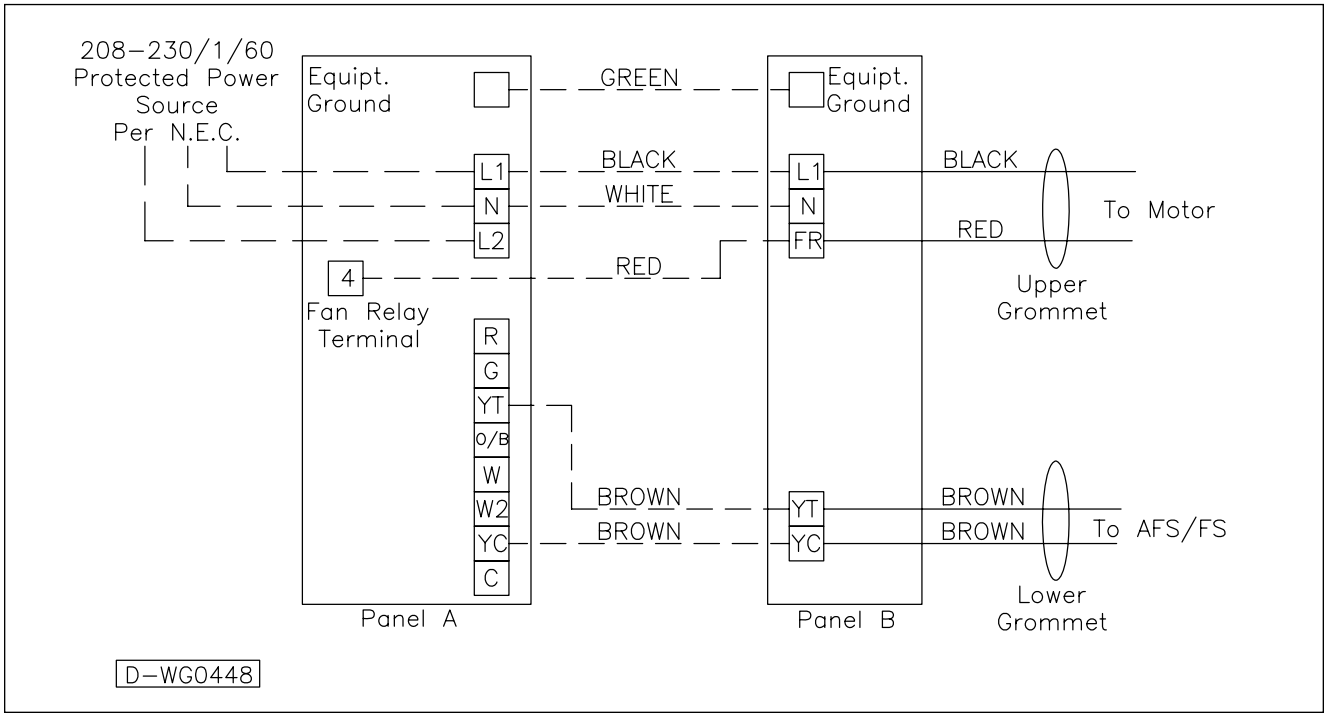
NOTICE: BROWN wires YT and YC run in series. YT on Panel A can be wired to YC on Panel B.