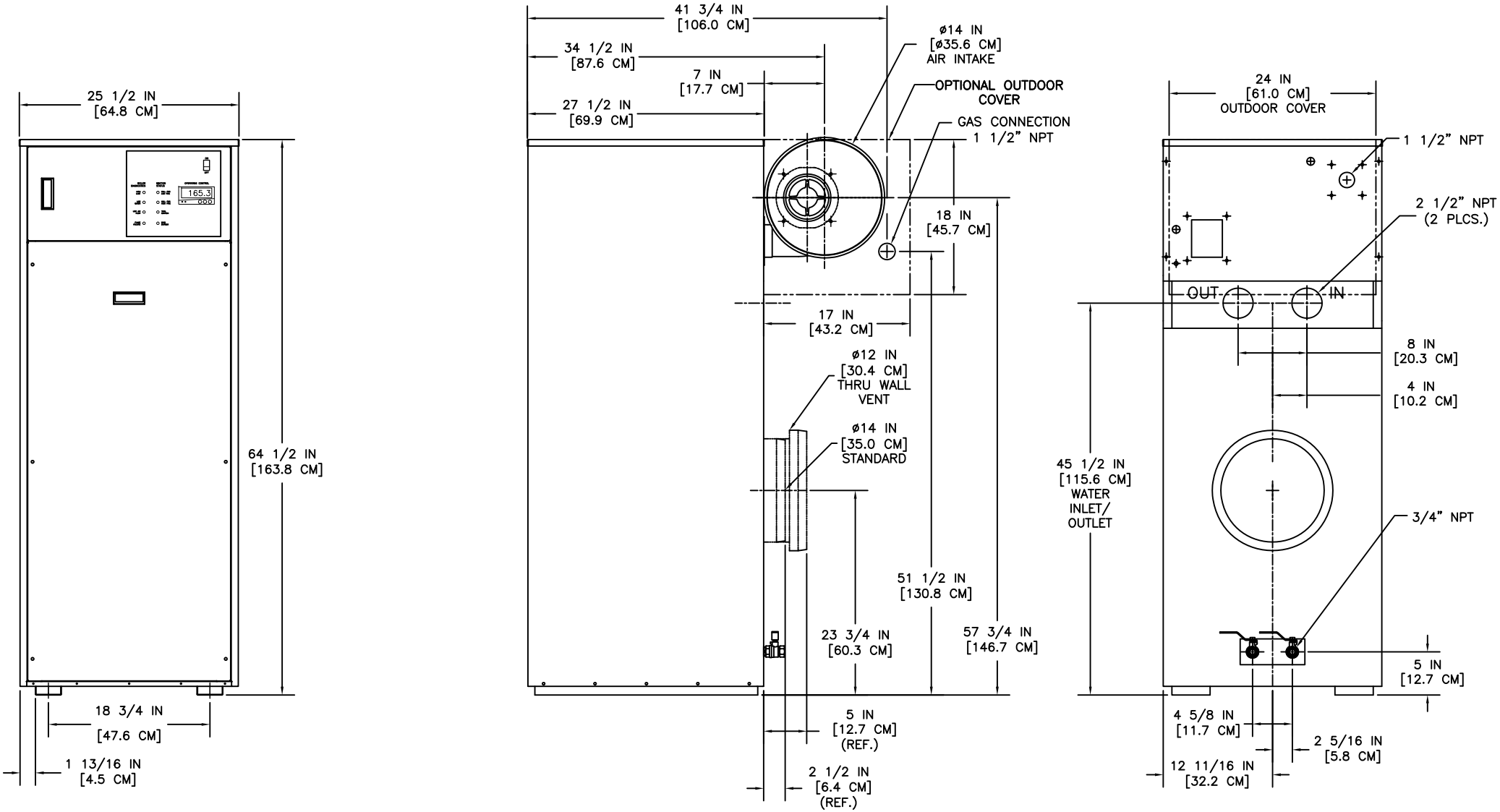
25 1/2 IN
[64.8 CM]
64 1/2 IN
[163.8 CM]
18 3/4 IN
[47.6 CM]
1 13/16 IN
[4.5 CM]
41 3/4 IN
[106.0 CM]
34 1/2 IN
[87.6 CM]
7 IN
[17.7 CM]
27 1/2 IN
[69.9 CM]
ø14 IN
[ø35.6 CM]
AIR INTAKE
OPTIONAL OUTDOOR
COVER
GAS CONNECTION
1 1/2" NPT
18 IN
[45.7 CM]
17 IN
[43.2 CM]
ø12 IN
[30.4 CM]
THRU WALL
VENT
ø14 IN
[35.0 CM]
STANDARD
51 1/2 IN
[130.8 CM]
23 3/4 IN
[60.3 CM]
57 3/4 IN
[146.7 CM]
5 IN
[12.7 CM]
(REF.)
2 1/2 IN
[6.4 CM]
(REF.)
24 IN
[61.0 CM]
OUTDOOR COVER
1 1/2" NPT
2 1/2" NPT
(2 PLCS.)
OUT
IN
8 IN
[20.3 CM]
4 IN
[10.2 CM]
45 1/2 IN
[115.6 CM]
WATER
INLET/
OUTLET
3/4" NPT
5 IN
[12.7 CM]
4 5/8 IN
[11.7 CM]
2 5/16 IN
[5.8 CM]
12 11/16 IN
[32.2 CM]