ARROW
FORMED STEEL LOUVERS 6" DEEP

TYPE FS-400-6

45° STANDARD BLADE - STATIONARY

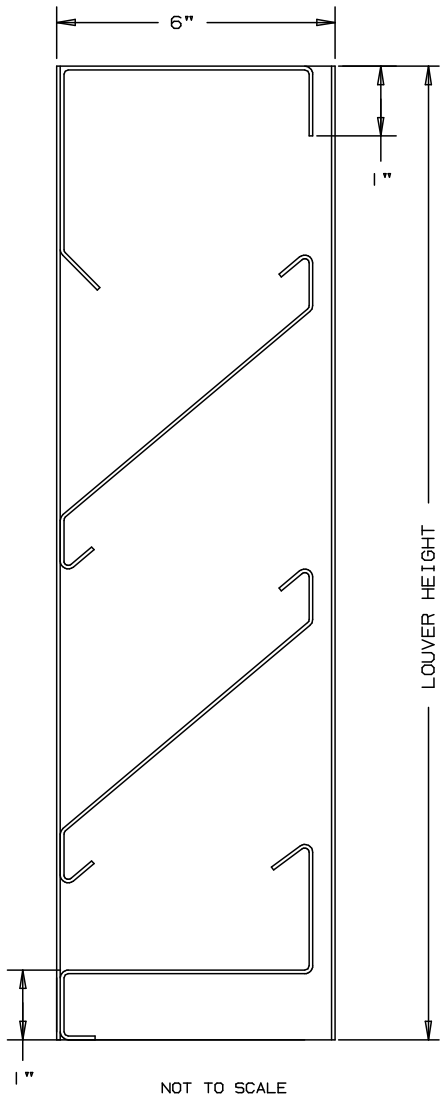

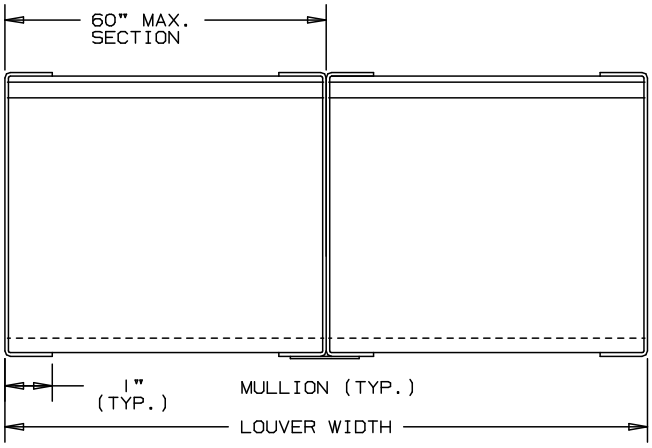

SPECIFICATIONS

FRAME: 18 GA. GALVANIZED STEEL
BLADES: 18 GA. GALVANIZED STEEL
APPROXIMATE BLADE CENTERS 6 9/16"
SCREEN: 1/2" SQ. MESH, 19 GA. GALVANIZED STEEL (.041") WHEN INDICATED
CONSTRUCTION: RIVETED AND OR WELDED, FULL JAMBS WITH BLADES, HEAD AND SILL CONTAINED WITHIN.

FINISH: _____

MINIMUM PANEL SIZE: 12" x 12"
MAXIMUM SINGLE PANEL SIZE: 60" x 96"

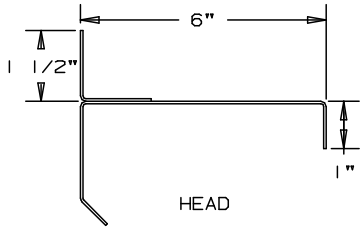

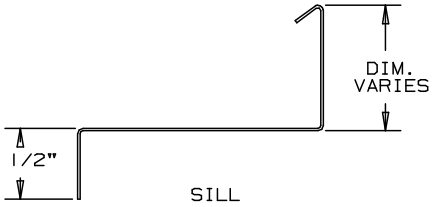

FLANGE FRAME AVAILABLE

FOR FREE AREA
-SEE REVERSE SIDE

LOUVERS WILL BE FABRICATED 1/2" SMALLER THAN OPENING SIZE UNLESS OTHERWISE SPECIFIED.

ITEM	QTY.	OPENING SIZE WIDTH	OPENING SIZE HEIGHT	LOUVER SIZE WIDTH	LOUVER SIZE HEIGHT	MULL	SCREENS TYPE	SCREENS LOC	

UNION MADE

ARROW UNITED INDUSTRIES
A DIVISION OF MESTEK, INC.
450 RIVERSIDE DRIVE
WYALUSING, PA 18853
TEL:(570)746-1888 FAX:(570)746-9286
WEB ADDRESS: WWW.ARROWUNITED.COM

AGENT: _____

ARCH./ENG.:
CONTR.:
PROJECT:
EDR: ECN: JOB:
DATE: DWN.: DWG.:

923-A-1994-1

LOUVER MODEL FS-400-6

45° STRAIGHT BLADE

FORMED STEEL - STATIONARY

PERFORMANCE DATA

FREE AREA

FREE AREA (SQ. FT.)									
	WIDTH								
HEIGHT	12"	18"	24"	30"	36"	42"	48"	54"	60"
12"	.19	.31	.42	.53	.65	.76	.88	.99	1.11
24"	.56	.89	1.23	1.56	1.90	2.23	2.57	2.90	3.24
36"	1.05	1.68	2.31	2.94	3.56	4.19	4.82	5.45	6.08
48"	1.61	2.58	3.54	4.51	5.48	6.44	7.41	8.38	9.34
60"	2.17	3.48	4.78	6.09	7.39	8.69	10.00	11.30	12.61
72"	2.71	4.33	5.95	7.58	9.20	10.83	12.45	14.08	15.70
84"	3.17	5.08	6.98	8.89	10.79	12.69	14.60	16.50	18.40
96"	3.54	5.67	7.80	9.92	12.05	14.18	16.30	18.43	20.56